FISHER & PAYKEL

627L SERIES 7 QUAD DOOR REFRIGERATOR FREEZER AUTOFILL PITCHERS, DUAL ICE MAKERS

27146-A RF620QZPVG1

SPARE PART GUIDE

BI

INTRODUCTION

Voltage

220 –240 50Hz

Kit parts

Where a part number is shown against the descriptions for kit components, they are also available as separate items. In addition, some parts may be supplied with these kits that are not available as separate items, and are therefore either not listed, or a part number is not shown against the part description in this guide.

Part list key

You may see one or more 'keys' in the first column of the part list tables, see below for explanations:

NI	Indicates the part is not illustrated in the diagram.
NOT USED	Indicates the diagram part is not used in this manual.
NS	Indicates the part is not servicable.
NM	Not available for this model.

For more information about our products and services, and for detailed contact information, visit our website:

GB https://www.fisherpaykel.com/uk/
IE https://www.fisherpaykel.com/ie/

CONTENTS

DOOR COMPONENTS	3
INTERNAL CABINET COMPONENTS	7
DUCT COMPONENTS	13
EXTERNAL CABINET COMPONENTS	15
TERMINAL, PLUGS & SOCKETS	19
REAR CABINET COMPONENTS	21

DOOR COMPONENTS

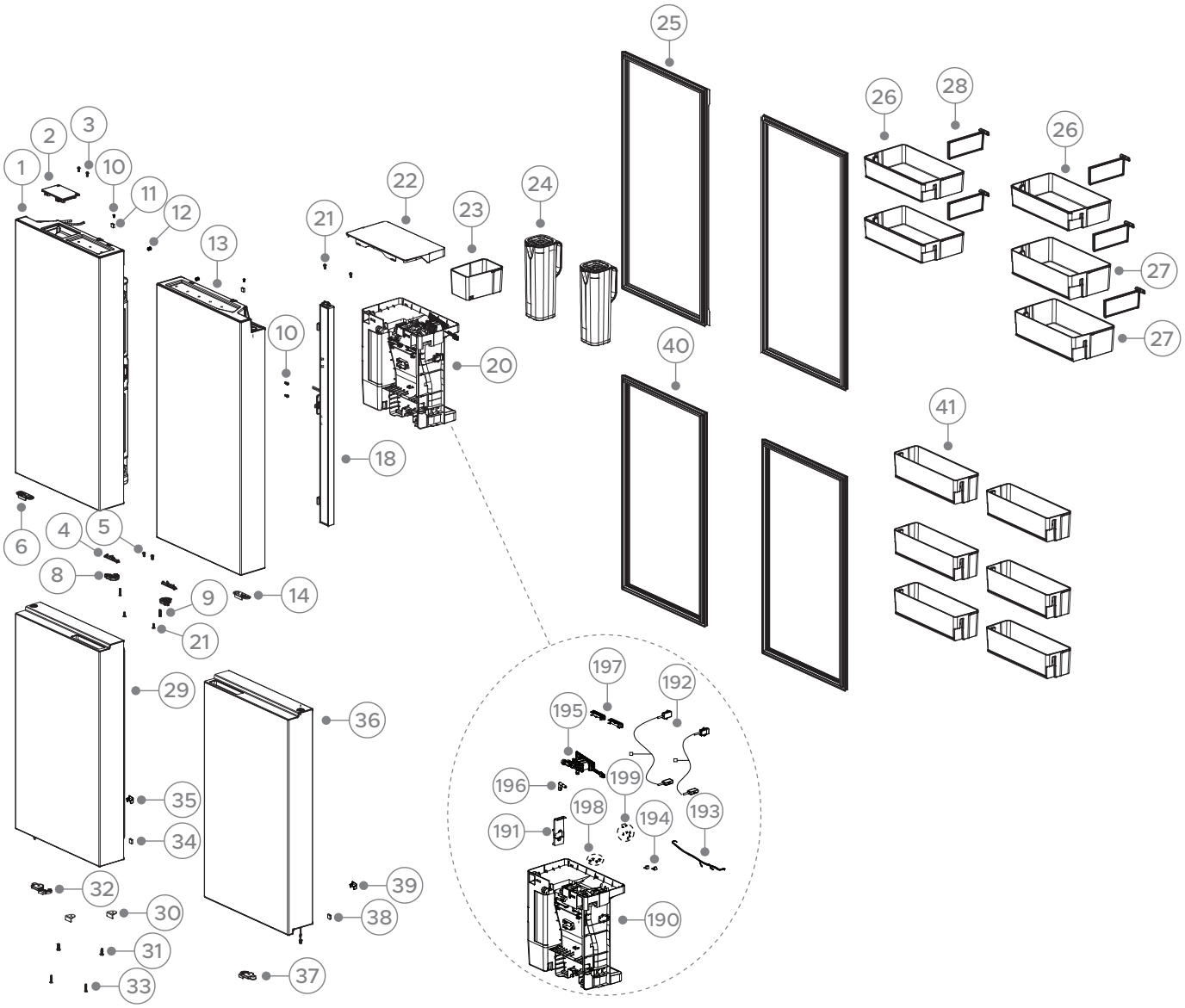

DWG 007639

DOOR COMPONENTS

PART	PART NUMBER	PART DESCRIPTION
1	H0060891676	DOOR PC LH
2	H0060887918A	BOARD CONTROL
3	H0060600097B	SCREW
4	H0060858426A	LAMP FREEZER
5	H0010600332	SCREW
6	H0060114904B	STOPPER DOOR
8	H0060247184	CLOSING HOOK
9	H004HR49G05R	SCREW (CLOSING HOOK)
10	H0060600186	SCREW FLAPPER
11	H0060301585	DOOR MAGNET
12	H0060230608E	STOPPER DOOR SCREW-ON
13	H0060891677	DOOR PC RH
14	H0060114905B	DOOR STOP RH
18	H0060858473B	FLAPPER ASSY BLACK
20	H0060888601	BEVERAGE CENTRE ASSY
22	H0060269709	COVER HOUSING
23	H0060269720	BIN
24	H0060889459	PITCHER & LID PAIR
25	H0060825978AR	GASKET PC
26	H0060269712	SHELF WINDOW WIDE
27	H0060269716	SHELF GALLON
28	H0060269918	DIVIDER SHELF
29	H0060891678	DOOR FC
30	H0060117465	DOOR STOP
31	H0060802013	SCREW
32	H0060242209	HOOK CLOSING BLACK
33	H004HR49G05R	SCREW (CLOSING HOOK)
34	H0060301585	DOOR MAGNET
35	H0060242169	COVER MAGNET
36	H0060891679	DOOR VTZ
37	H0060229662B	CLOSING HOOK VTZ RH
39	H0060242169	COVER MAGNET
40	H0060825978AS	GASKET FC BLACK
41	H0060269719	SHELF DOOR FC/VTZ

DOOR COMPONENTS

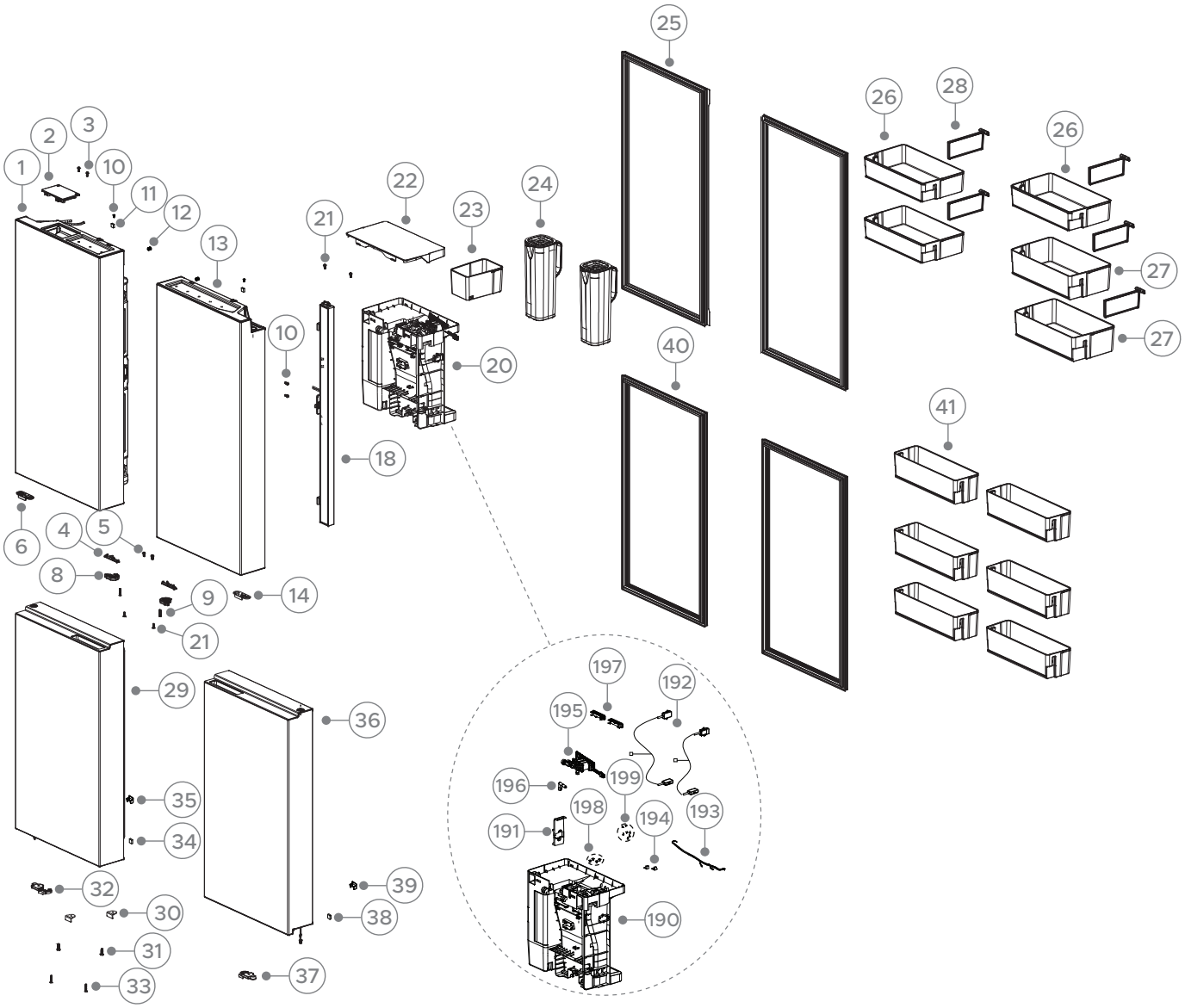

DWG 007639

DOOR COMPONENTS

PART	PART NUMBER	PART DESCRIPTION
190	H0060269708	HOUSING
191	H0060269713	BRACKET SENSOR
192	H0064002840	SENSOR CAPACTIVE
193	H0060405868	HARNESS
194	H0064001332A	SENSOR DOOR PC
195	H0064002810	VALVE WATER
196	H0060270955	TUBE ELBOW
197	H0060888653	LIGHT DISPLAY IW
198	H0060600182	SCREW-20
199	H00608020026	SCREW

INTERNAL CABINET COMPONENTS

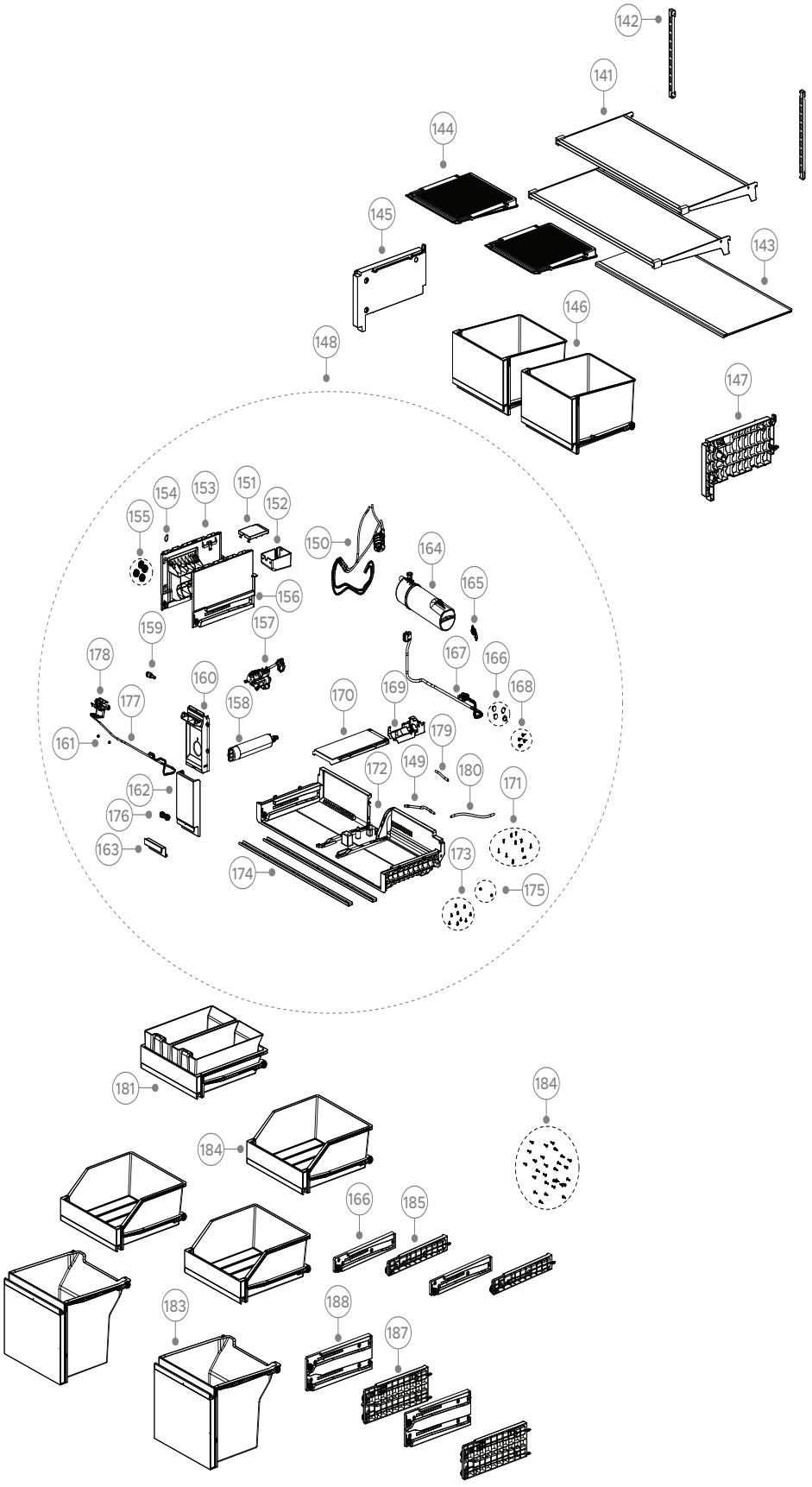

DWG 007643

INTERNAL CABINET COMPONENTS

PART	PART NUMBER	PART DESCRIPTION
141	H0060869655A	SHELF CANTILEVER
142	H0060130504	BRACKET SHELF CANTILEVER
143	H0060886575	RETAINER SHELF PC TOP
144	H0060269046	LID HUMIDITY CONTROL
145	H0060269052	SUPPORT RETAINER SHELF LH
146	H0060886578	DRAWER PC
147	H0060269052A	SUPPORT RETAINER SHELF RH
148	H0060886576	BRACKET FILTER MODULE
	INCLUDES H0060249386	TRAY EVAPORATOR
	INCLUDES H0060236202G	BASE WATER FILTER
	INCLUDES H0060269768	COVER TERMINAL BOX
	INCLUDES H0060269767	TERMINAL BOX
	INCLUDES H0060269062	BRACKET MID SLIDE LH PC
	INCLUDES H0060201200	CAPILLARY TUBE BRACKET
	INCLUDES H0060230195	WHEEL
	INCLUDES H0060269063	BRACKET MID SLIDE RH PC
	INCLUDES H0064002383D	VALVE WATER
	INCLUDES H0060236201A	REFRIGERATOR WATER FILTER
	INCLUDES H0060256576A	RESTRICTOR FLOW PLUG IN
	INCLUDES H0060269065	LID FILTER
	INCLUDES H0060255461	SPACER RUBBER
	INCLUDES H0060269054	COVER FRONT FILTER
	INCLUDES H0060138109A	COVER FILTER FRONT-ALUMINIUM
	INCLUDES H0060883607	TANK WATER
	INCLUDES H0060269830	JOINT ASSY
	INCLUDES H00602160304K	CAP SCREW WHITE
	INCLUDES H0060405869	VALVE WATER CONNECTION LINE
	INCLUDES H0060220008	NAIL RUBBER
	INCLUDES H0060853565	FILTER BRACKET WATER
	INCLUDES H0060251650A	COVER FILTER TOP
	INCLUDES H0064098047	SCREW
	INCLUDES H0060269059	BIN CARRIER ASSY
	INCLUDES H0060600185	SCREW
	INCLUDES H0060128564	RAIL STIFFENING BASE

INTERNAL CABINET COMPONENTS

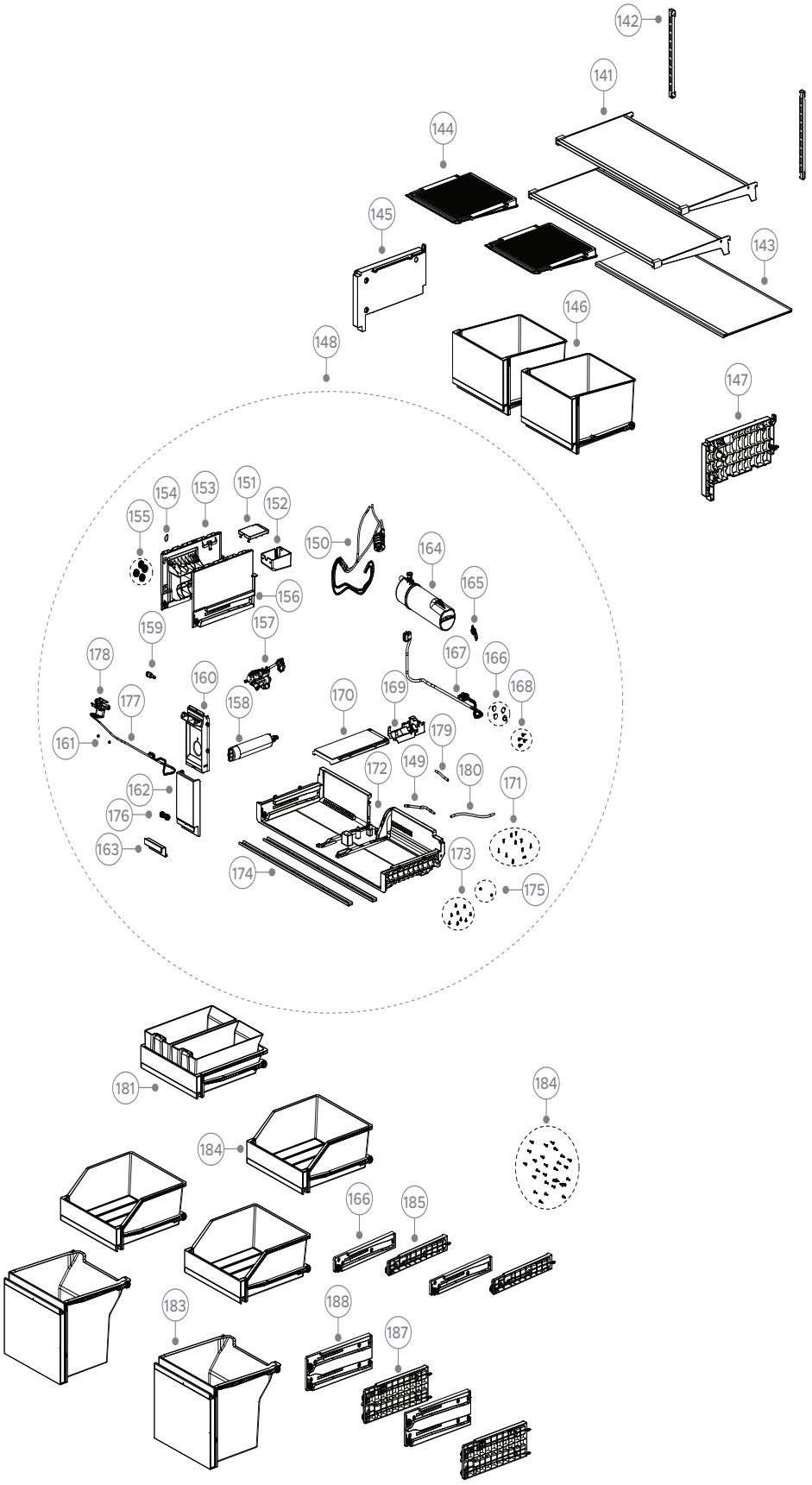

DWG 007545

INTERNAL CABINET COMPONENTS

PART	PART NUMBER	PART DESCRIPTION
	INCLUDES H0040600024	SCREW UNDER DOOR LIGHT
	INCLUDES H0060600081	WATER PIPE CONNECTOR
	INCLUDES H0060405870	CABLE WATER VALVE
	INCLUDES H0064003264	VALVE WATER
	INCLUDES H0060222973AH	PIPE WATER
	INCLUDES H0060222973AG	PIPE WATER
149	H0060271715	PIPE WATER
150	H0060236202G	BASE WATER FILTER
151	H0060269768	COVER TERMINAL BOX
152	H0060269767	TERMINAL BOX
153	H0060269062	BRACKET MID SLIDE LH PC
154	H0060201200	CAPILLARY TUBE BRACKET
155	H0060230195	WHEEL
156	H0060269063	BRACKET MID SLIDE RH PC
157	H0064002383D	VALVE WATER
158	847200	FILTER WATER REF FWC3
159	H0060256576A	CONNECTOR WATER
160	H0060269065	LID FILTER
161	H0060255461	SPACER RUBBER
162	H0060269054	COVER FRONT FILTER
163	H0060138109A	COVER FILTER FRONT-ALUMINIUM
164	H0060883607	TANK WATER
165	H0060269830	JOINT ASSY
166	H00602160304K	CAP SCREW WHITE
167	H0060405869	VALVE WATER CONNECTION LINE
168	H0060220008	NAIL RUBBER
169	H0060853565	FILTER BRACKET WATER
170	H0060251650A	COVER FILTER TOP
171	H0064098047	SCREW
172	H0060269059	BIN CARRIER ASSY
173	H0060600185	SCREW
174	H0060128564	RAIL STIFFENING BASE
175	H0040600024	SCREW UNDER DOOR LIGHT
176	H0060600081	WATER PIPE CONNECTOR
177	H0060405870	CABLE WATER VALVE
178	H0064003264	VALVE WATER
179	H0060222973AH	PIPE WATER

INTERNAL CABINET COMPONENTS

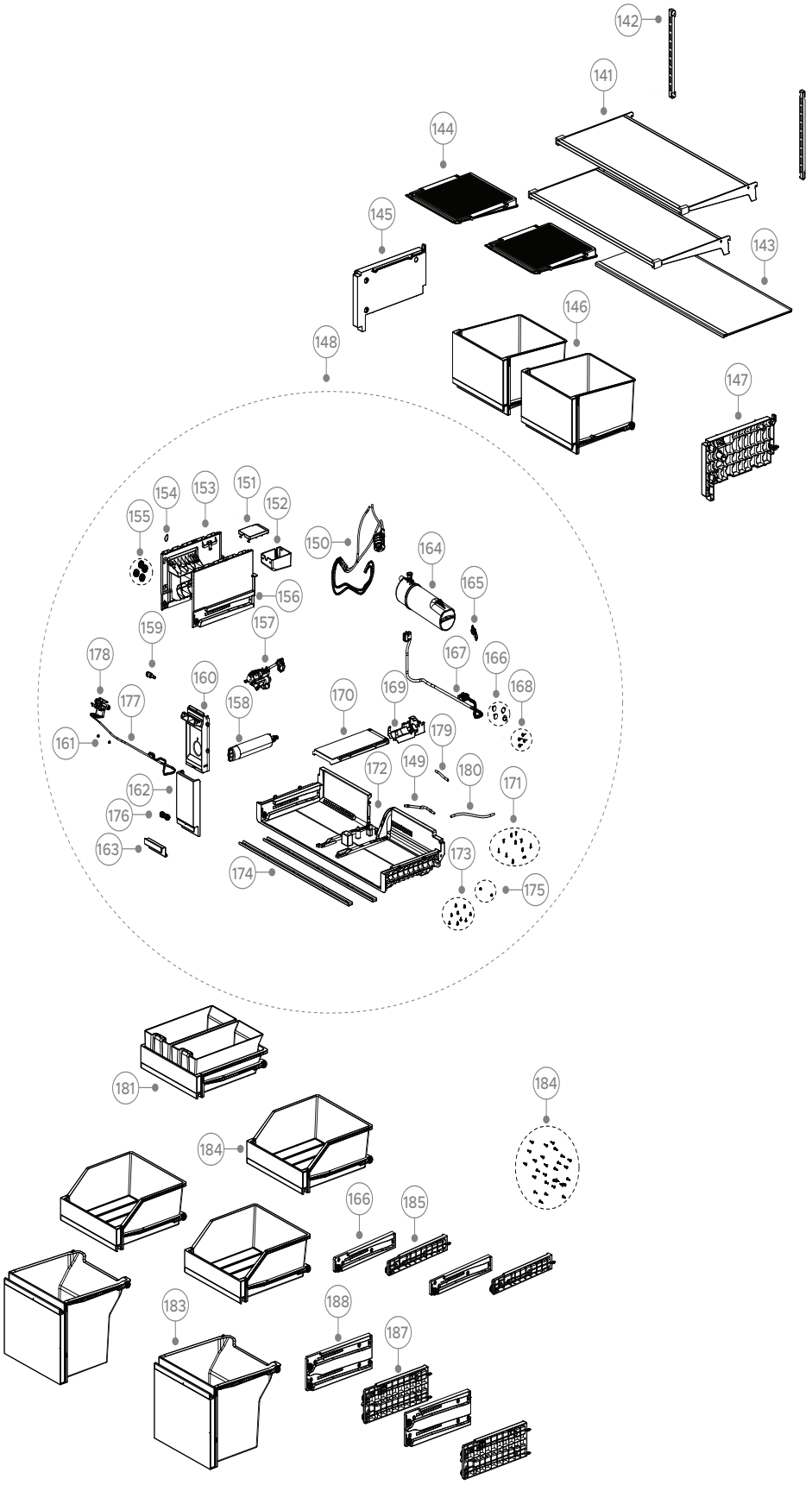

DWG 007545

INTERNAL CABINET COMPONENTS

PART	PART NUMBER	PART DESCRIPTION
180	H0060222973AG	PIPE WATER
181	H0060888608	DRAWER ICE
182	H0060886580	TRAY FC ASSY
183	H0060886581	TRAY BTM DRAWER FC ASSY
184	H0060600097	SCREW
185	H0060871606A	SLIDE TRAY ASSY FC RH
186	H0060871606	SLIDE TRAY ASSY FC LH
187	H0060871605A	SLIDE DRAWER LOWER FC RH
188	H0060871605	SLIDE DRAWER LOWER FC LH

DUCT COMPONENTS

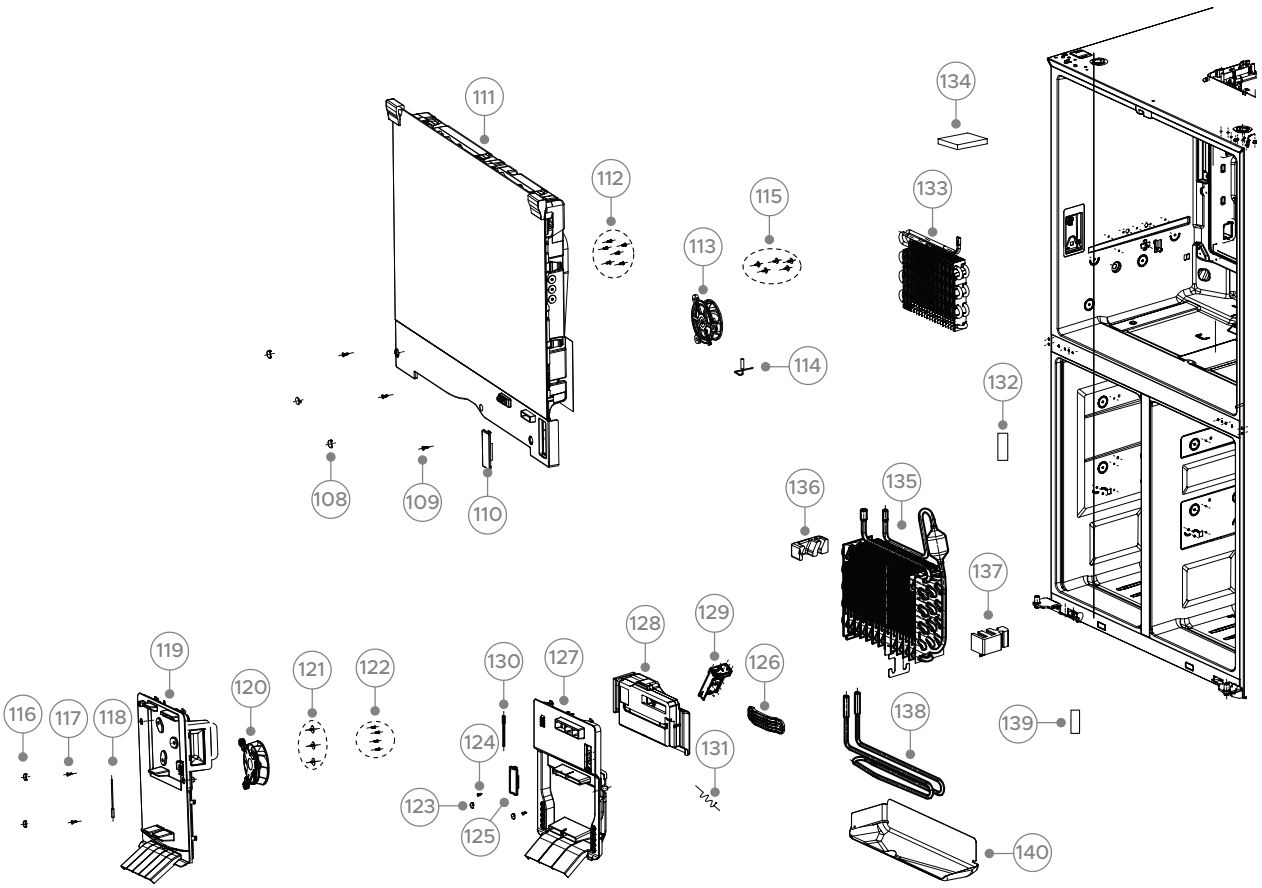

DWG 007642

DUCT COMPONENTS

PART	PART NUMBER	PART DESCRIPTION
109	H0060600097	SCREW
110	H0060222026	FREEZER AIRFLOW DUCT CABLE COV
111	H0060886930	DUCT PC ASSY
112	H0060802008	SCREW
113	H0064001939B	FAN PC FC 4 WIRE
114	H0060401425C	SENSOR REF AMBIENT
115	H0060600002	SCREW
116	H00602160304K	CAP SCREW WHITE
117	H0060600097	SCREW
118	H0060402182A	CABLE SENSOR FREEZER
119	H0060886836	FREEZER DUCT COVER ASSEMBLY
120	H0064002766S	SHIELD FAN FRZ
121	H0060600002	SCREW
122	H0060802008	SCREW
123	H00602160304K	CAP SCREW WHITE
124	H0060600097	SCREW
125	H0060222026	FREEZER AIRFLOW DUCT CABLE COV
126	H0060241552	COVER PIPE SUCTION
127	H0060871305	COVER AIR DUCT LWR SWITCHZONE
128	H0060871304	COVER AIR DUCT UPPR SWITCHZONE
129	H00609340017	DAMPER AIR
130	H0060401766A	SENSOR TEMPERATURE
131	H0064002787	HEATER AUXILLARY DAMPER
132	H0064000024	SENSOR TYPE A
133	H0060706047A	EVAPORATOR PC
134	H0060261947	BLOCK PE
135	H0060706905A	EVAPORATOR FC
136	H0060312688	HOUSING EVAPORATOR LH
137	H0060312685	HOUSING EVAPORATOR RH
138	H0064002027	HEATER DEFROST FC
139	H0064000025	SENSOR TYPE B
140	H0060130503	TRAY DRIP EVAP FC

EXTERNAL CABINET COMPONENTS

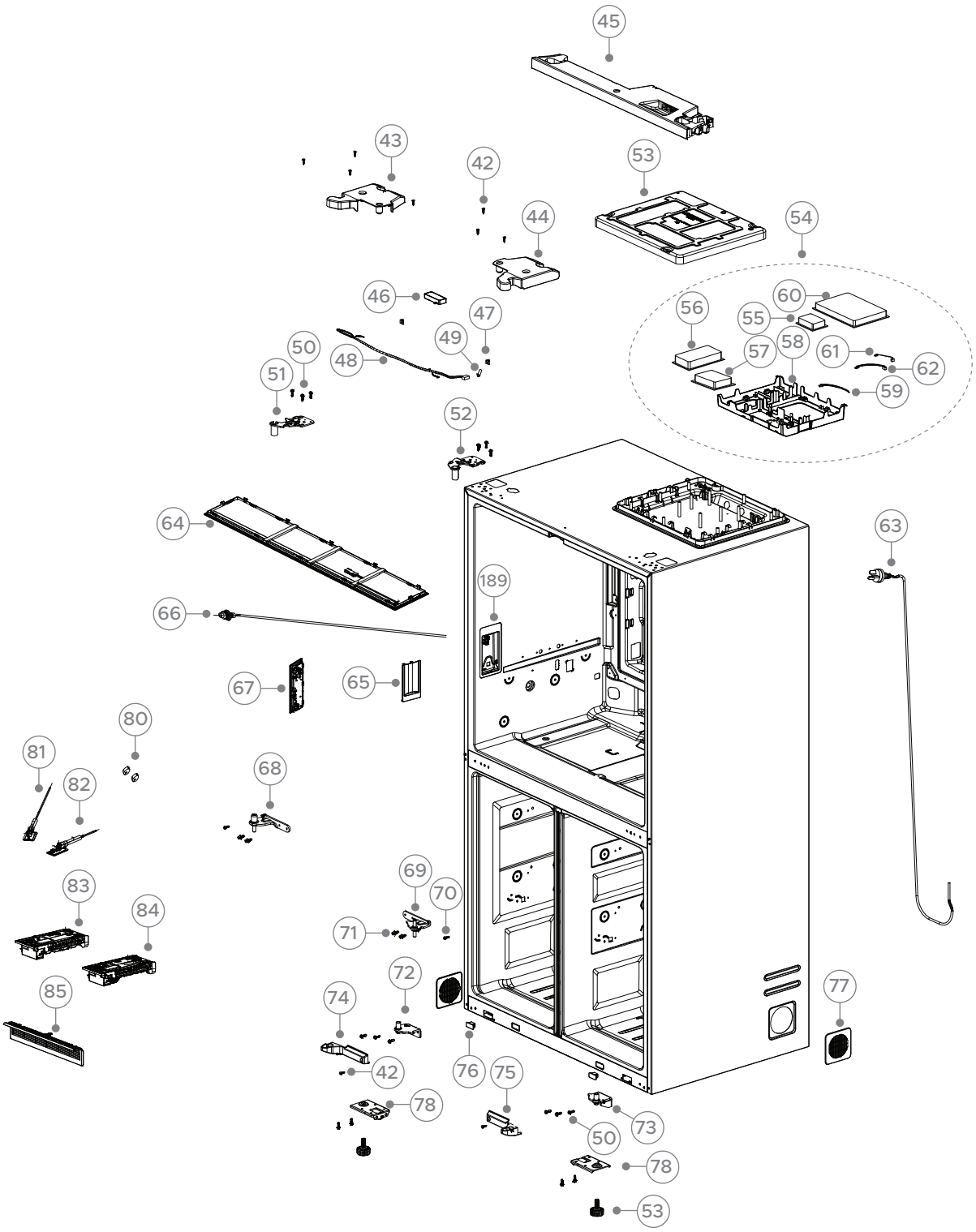

DWG 007640

EXTERNAL CABINET COMPONENTS

PART	PART NUMBER	PART DESCRIPTION
42	H0060600097	SCREW
43	H0060240799B	COVER HINGE LH
44	H0060240800A	COVER HINGE RH BLACK
45	H0060871898A	COVER TOP HINGE
46	H0061801208	MODULAR WIFI
47	H0064001332	MAGNET SWITCH DOOR
48	H0060404397B	CABLE COVER HINGE TOP
49	H0064002683	SENSOR HUMIDITY
50	H0060600017	SCREW
51	H0060116388A	HINGE TOP LH
52	H0060116389	HINGE PC TOP
53	H0060125087	COVER CONTROLLER
54	H0060866736AQ	BOARD CONTROL ASSY
	INCLUDES H0061800598B	BOARD ELEC SOURCE FR4
	INCLUDES H0061800501	BOARD POWER
	INCLUDES H0061801177G	BOARD ICE MAKER
	INCLUDES H0060233826	HOUSING CONTROLLER MAIN
	INCLUDES H0060403120C	CABLE
	INCLUDES H0061801175AA	BOARD CONTROL MAIN
	INCLUDES H0060405861	CABLE 12V
	INCLUDES H0060404400A	CABLE 230V
55	H0061800598B	BOARD ELEC SOURCE FR4
56	H0061800501	BOARD POWER
57	H0061801177G	BOARD ICE MAKER
58	H0060233826	HOUSING CONTROLLER MAIN
59	H0060403120C	CABLE
60	H0061801175AA	BOARD CONTROL MAIN
61	H0060405861	CABLE 12V
62	H0060404400A	CABLE 230V
63	H0060401749C	CABLE POWER HK/SG/UK
64	H0064003283A	LIGHT CEILING PANEL
65	H0060888733	PADDLE DISP & SWITCH INTERNAL
66	H0060269730	PIPE WATER
67	H0060887919	MOD TFT DISP INTERNAL

EXTERNAL CABINET COMPONENTS

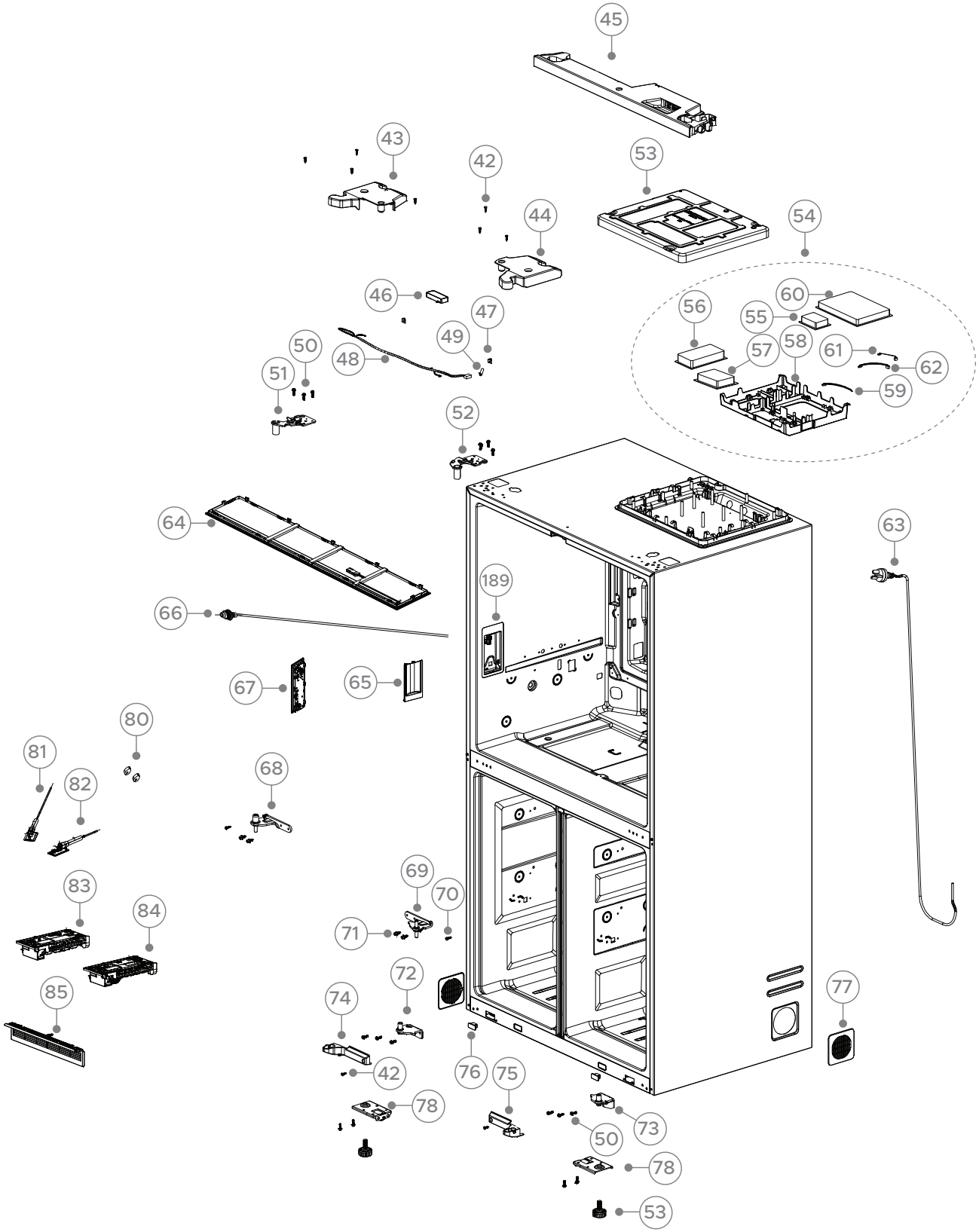

DWG 007640

EXTERNAL CABINET COMPONENTS

PART	PART NUMBER	PART DESCRIPTION
68	H0060125309B	HINGE MID RH
69	H0060125309A	HINGE MID LH
70	H0077010057	SCREW
71	H0060600165B	SCREW SIX ANGLE HEAD
72	H0060124883A	HINGE BTM LH
73	H0060124884A	HINGE BTM RH
74	H0060241342	COVER HINGE BTM LH
75	H0060241343	COVER HINGE BTM RH
76	H0064002286C	SENSOR HALL BLACK
77	H0060232956D	GRILLE BLACK
78	H0060859013	WHEEL ASSY FRONT
79	H0060617132A	FOOT ADJUSTABLE
80	H0060318501	ELEMENT
81	H0060883650G	OUTLET WATER LH
82	H0060887100	OUTLET WATER RH
83	H0060884795	ICEMAKER LARGE ICE ASSY
84	H0060884791	ICEMAKER SMALL ICE ASSY
85	H0060270253	FASCIA DUAL ICE MAKER
189	H0060889263	SPOUT INTERNAL WATER DISPENSER

1 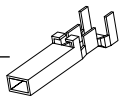 JST SOCKET TERMINAL

2 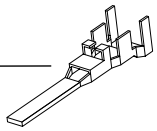 JST PIN TERMINAL

3 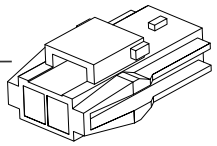 JST SOCKET

4 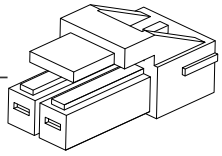 JST PLUG

5 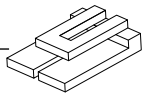 JST RETAINER

TERMINAL, PLUGS & SOCKETS

PART	PART NUMBER	PART DESCRIPTION	COMMENTS
1	819607P	TERMINAL SYF-01T PKT 10	26/20 AWG
	819608P	TERMINAL SYF-41T PKT 10	20/16 AWG
2	819609P	PIN/TERM SYM-01T PKT 10	26/20 AWG
	819610P	PIN/TERM SYM-41T PKT 10	20/16 AWG
3	819615	JST SOCKET 2PIN YLR-02V	
	819616	JST SOCKET 3PIN YLR-03V	
	819617	JST SOCKET 4PIN YLR-04V	
	819618	JST SOCKET 6PIN YLR-06VF	
	819619	JST SOCKET 8 PIN YLR-08V	
4	819611	JST PLUG 2PIN YLP-02V	
	819612	JST PLUG 4PIN YLP-04V	
	819613	JST PLUG 6PIN YLP-06V	
	819614	JST PLUG 8PIN YLP-08V	
5	819620	RETAINER 2 WAY YLS-02V	
	819621	RETAINER 3 WAY YLS-03V	
NI	150807	TERMINAL REMOVAL TOOL	
	855288	EXTRACTION TOO M ML AMP 1897271	

REAR CABINET COMPONENTS

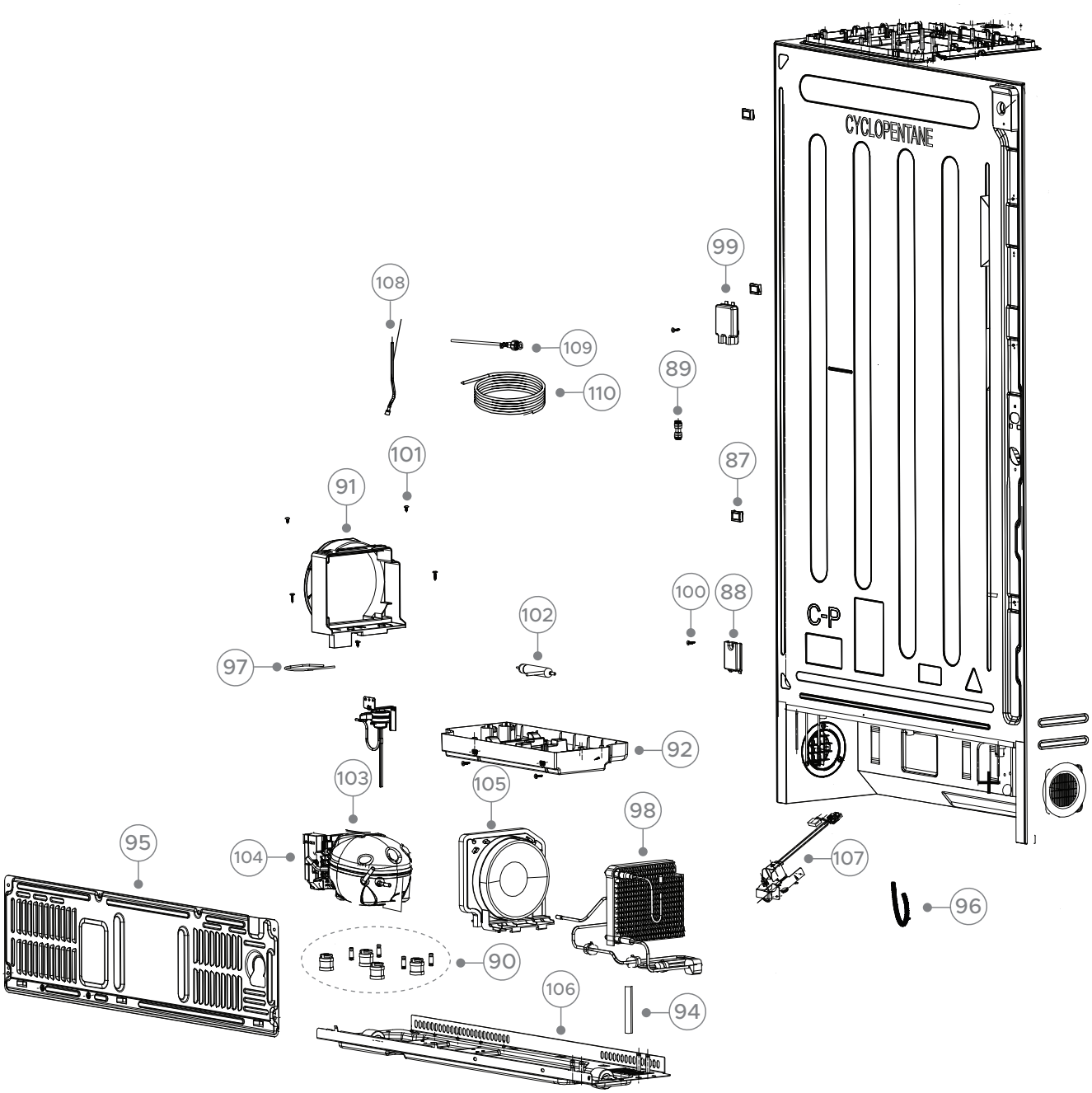

DWG 007641

REAR CABINET COMPONENTS

PART	PART NUMBER	PART DESCRIPTION
87	H0060251570A	SPACER WATER PIPE ABS
88	H0060251755	COVER PIPE COLD WATER
89	H0060236007	CONNECTOR WATER
90	H0060705946F	KIT GROMMET AND POST
	INCLUDES	GROMMETS
	INCLUDES	POSTS
91	H0060249387	COVER CONDENSER MICROCHANNEL
92	H0060249386	TRAY EVAPORATOR
93	H0064002039	VALVE REFRIGERANT
94	H0060732763	INJECTION TUBE
95	H0060850056	COMPRESSOR COVER
96	H0060163462A	WATER PIPE SPRING II
97	H0060700603	TUBE SUCTION
98	H0060705884G	CONDENSER MICROCHANNEL
99	H0060215262	COVER FILTER
100	H0060600097	SCREW
101	H0060600186	SCREW FLAPPER
102	H0060702808	DRIER FILTER
103	H0060707815	COMPRESSOR
	INCLUDES H0061801418AXB	BOARD INVERTER
104	H0061801418AXB	BOARD INVERTER
105	H0060852717	FAN CONDENSER
106	H0060853327H	PLATE BASE
107	H0064002381A	ISOLATION VALVE
108	H0060127894E	TUBE MAINS .8MTR 7/16 INCH
109	H0060124530	TUBE VALVE .8MTR 1/2 INCH
110	H0060222973G	TUBE WATER 4M

FISHERPAYKEL.COM

© Fisher & Paykel Appliances 2026. All rights reserved.

The models shown in this guide may not be available in all markets and are subject to change at any time.

The product specifications in this guide apply to the specific products and models described at the date of issue. Under our policy of continuous product improvement, these specifications may change at any time.

For current details about model and specification availability in your country, please go to our website or contact your local Fisher & Paykel dealer.

27146-A 11.26